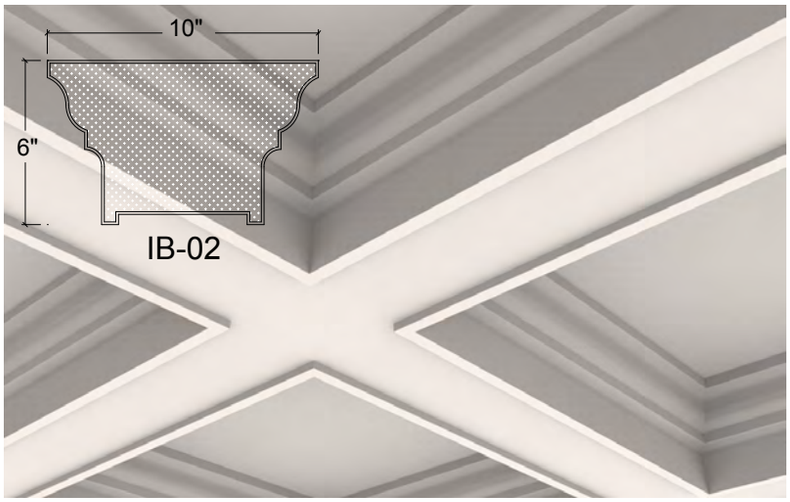

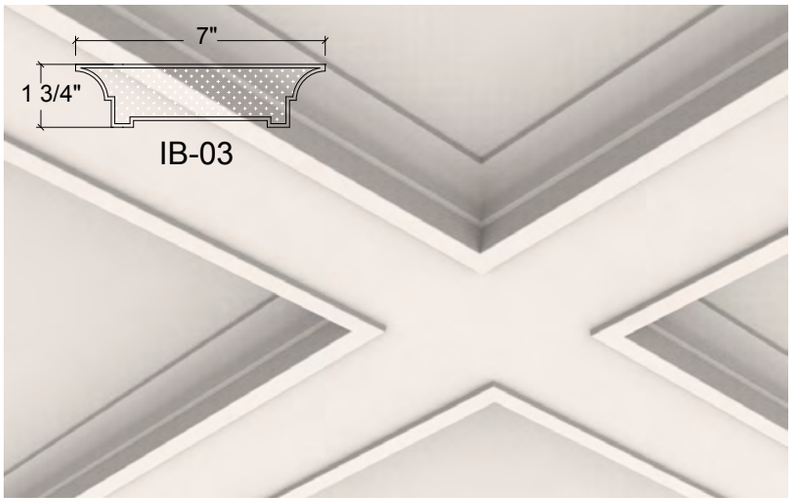

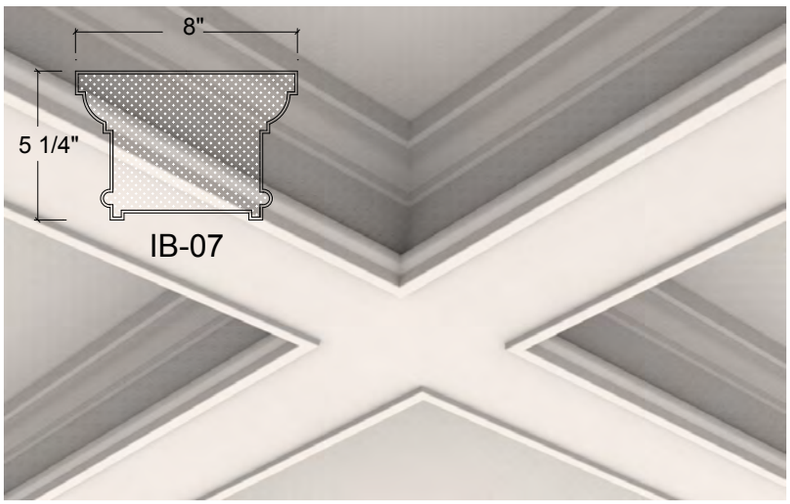

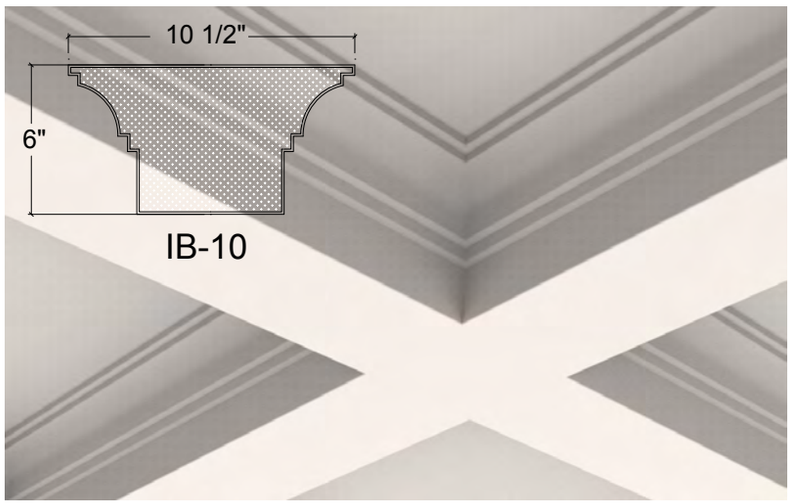

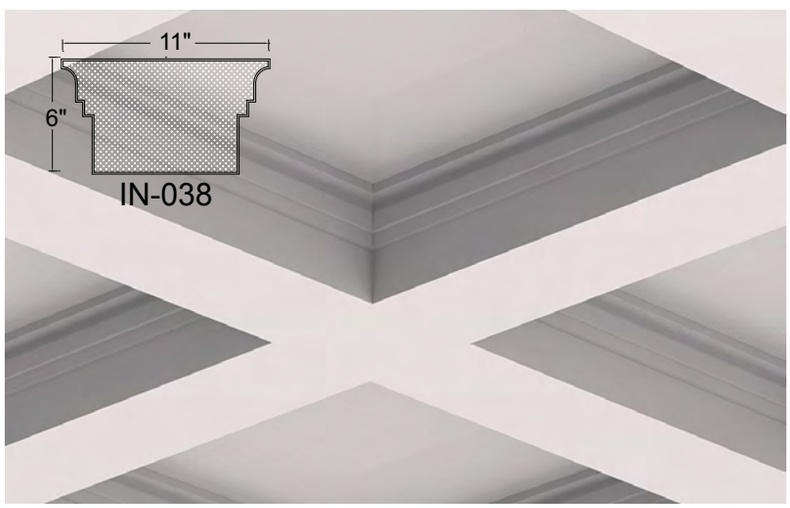

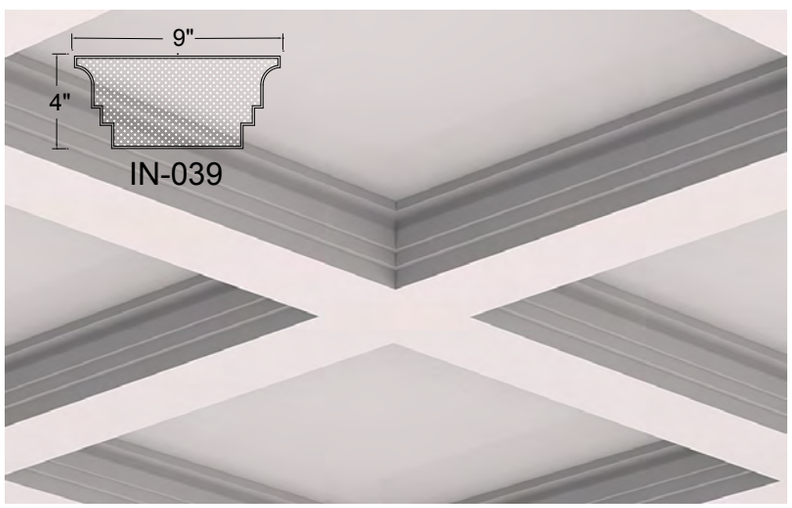

EVEREST
MOULDINGS & SPECIALITIES

3226 Wharton Way
Mississauga, ON L4X 2C1
Canada
Phone: 416.848.4123 • Toll Free: 1 877.300.6656
Fax: 416.913.1584
www.everestmouldings.com
info@everestmouldings.com

Our location

3226 Wharton Way
Mississauga, ON
L4X 2C1, Canada

Open in Google Maps